2/2 3/2

Direct Inline Poppet Valves - Design Features

Valves

- Reliable: used world-wide in power plant applications.
- High flow design with a short stroke for fast response.
- Front or rear mounting.
- Flow from 3 to 34 Cv.
- Specific application needs? Consult the factory.
  We will build it for you.

Tapered Cush-N-Seal

- Molded from superior, tough, Carboxylated Nitrile. Provides five times the abrasion resistance and service life of standard Buna-N (NBR) seals.
- Cushion design increases life.
- Self-cleaning, cushioned poppet allows for quieter operation.

Solenoid ... Guaranteed Against Burnout

- Three-way pilot uses full air line pressure to shift the valve.
- Pilot is internally supplied when the pressure at port one is 35 to 150 PSIG (240 to 1030 kPa).
- Coil is hermetically sealed as an integral watertight molded unit.
- Intrinsically-safe and explosion-proof versions available.
- Push Non-Locking Override is standard.
  (Extended Turn and Turn-Locking available.)

Certificate of Compliance

Products Certified To:

- CSA - (C22.2 and UL STD 429)
- Factory Mutual - Explosion Proof Environments
- ATEX - Explosion Proof Environments
- CE - EMF and Low Voltage Directives

2/2 3/2

Pilot Inline Poppet Valves - Specs & Model Numbers

Specifications

Valve Operation		
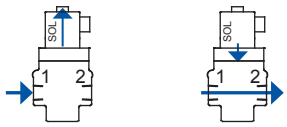 DE-ENERGIZED / ENERGIZED	**2/2 Normally Closed** **De-Energized:** Blocks Pressure at Port 1 **Energized:** Pressure from Port 1 to Port 2	
DE-ENERGIZED / ENERGIZED	**2/2 Normally Open** **De-Energized:** Pressure from Port 1 to Port 2 **Energized:** Blocks Pressure at Port 1	

Valve Operation		
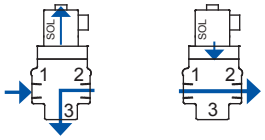 DE-ENERGIZED / ENERGIZED	**3/2 Normally Closed** **De-Energized:** Exhausts Pressure from Port 2 to Port 3 Blocks Pressure at Port 1 **Energized:** Pressure from Port 1 to Port 2	
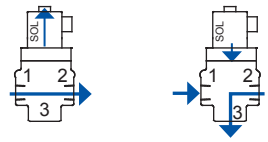 DE-ENERGIZED / ENERGIZED	**3/2 Normally Open** **De-Energized:** Pressure from Port 1 to Port 2 **Energized:** Exhausts Pressure from Port 2 to Port 3 Blocks Pressure at Port 1	

Operating Temperatures	Operator		Treated Buna-N Seals (Treated NBR, Standard)	Fluoroelastomer Seals (FPM (FKM), Option A)
	Solenoid Pilot	Standard	-18°C to +50°C (0°F to +123°F)	-18°C to +50°C (0°F to +123°F)
		High Temp (Option CT or T)	-18°C to +82°C (0°F to +180°F)	-18°C to +82°C (0°F to +180°F)
	Air Pilot	Standard	-18°C to +82°C (0°F to +180°F)	-18°C to +121°C (0°F to +250°F)

Operating Pressures	Operator		Inlet Port	External Pilot Port
	Solenoid Pilot	Standard	240 - 1030 kPa (35 - 150 PSIG)	-
		External (Option B)	0 - 1030 kPa (0 - 150 PSIG)	240 - 1030 kPa (35 - 150 PSIG) and ≥ inlet
		Vacuum Spring (Option J)	Vacuum	240 - 1030 kPa (35 - 150 PSIG) and ≥ inlet
	Air Pilot	Standard	0 - 1720 kPa (0 - 250 PSIG)	Min. 240 kPa (35 PSIG) and ≥ inlet
		Vacuum Spring (Option J)	Vacuum	240 - 1030 kPa (35 - 150 PSIG) and ≥ inlet

Filtration & Lubrication	Media - Air Or Inert Gas
	Air Line Lubrication of Automatic Valve products is not required, but is recommended to maximize service life. Oils should be compatible with seal material, have an ISO 32 viscosity, and have an aniline range between 82°C (180°F) and 99°C (210°F). Filter to 50 microns or better. For temperatures below 40°F, air must be dry to prevent formation of ice. Refer to the Maintenance section of this catalog for recommended lubricants.

Model Numbers

Series	Base Type	Port Size	Body Type	Body Design	Operator 1	Operator 2	Voltage[1]	Options*
P06	0 Inline	3 1/4 4 3/8 5 1/2	G 3 Way NC H 3 Way NO J 2 Way NC K 2 Way NO	A Single	A Air Pilot W Weather-Proof Solenoid	R 2 Position Spring	-AA 110/50, 120/60 -AB 220/50, 240/60, 125VDC -DA 22/50, 24/60, 12VDC -DB 24VDC	A Fluoroelastomer Seals B External Pilot Connection C Conduit Coil CT Conduit Coil High Temperature G 18" Flying Leads J Vacuum Spring L Low Watt Coil (2.5 Watts) (P06,P14) LL Lowest Watt Coil (0.7 Watts) (P06,P14) T High Temperature Coil (P36) Y Explosion-Proof Coil (CSA, FM) (P06,P14) Z Explosion-Proof Coil (ATEX, PTB) (P06,P14) 1 Push Turn-Locking Override 2 Extended Turn-Locking Override
P14		5 1/2 6 3/4 7 1						
P36		7 1 8 1 1/4 9 1 1/2			A Air Pilot B Weather-Proof Solenoid D Explosion-Proof Solenoid			

* Not all Options are available for all models. Refer to "Options" at the end of this Section for additional information.
[1] Consult the Factory for additional voltages.

2/2 3/2

Pilot Inline Poppet Valves - Standard Solenoid

P06

P0605JAWR
(Normally Closed)

P14

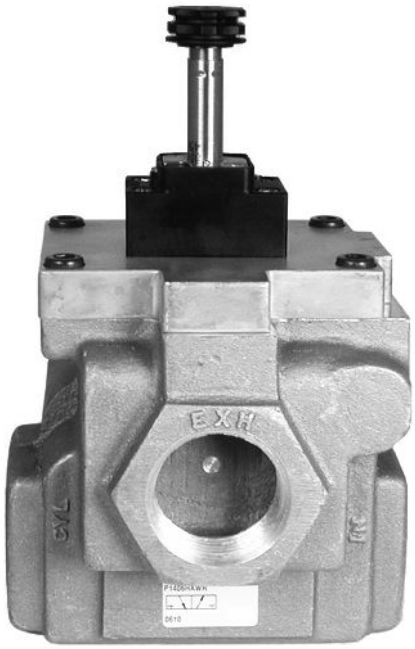

P1406HAWR
(Normally Open)

Model Numbers

Series	Port Size 1,2	Port Size 3	Flow l/min (Cv)	2/2 Normally Closed	2/2 Normally Open	3/2 Normally Closed	3/2 Normally Open	Materials Body	Materials Seal	Wt Kg (lb)
				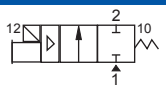	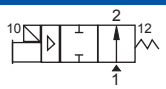	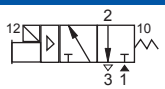	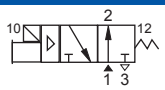			
P06	1/4	1/2	3150 (3.2)	P0603JAWR-**	P0603KAWR-**	P0603GAWR-**	P0603HAWR-**	Aluminum	NBR	1,8 (4.0)
P06	3/8	1/2	3840 (3.9)	P0604JAWR-**	P0604KAWR-**	P0604GAWR-**	P0604HAWR-**	Aluminum	NBR	1,8 (4.0)
P06	1/2	1/2	5410 (5.5)	P0605JAWR-**	P0605KAWR-**	P0605GAWR-**	P0605HAWR-**	Aluminum	NBR	1,8 (4.0)
P14	1/2	1	8170 (8.3)	P1405JAWR-**	P1405KAWR-**	P1405GAWR-**	P1405HAWR-**	Aluminum	NBR	2,3 (5.1)
P14	3/4	1	11120 (11.3)	P1406JAWR-**	P1406KAWR-**	P1406GAWR-**	P1406HAWR-**	Aluminum	NBR	2,3 (5.1)
P14	1	1	13580 (13.8)	P1407JAWR-**	P1407KAWR-**	P1407GAWR-**	P1407HAWR-**	Aluminum	NBR	2,3 (5.1)

** = Coil Voltage Code. Coils also sold separately. Refer to "Electrical Information" at the end of this Section for additional information.

Pilót Inline Poppet Valves - Standard Solenoid

P36 - Weather-Proof

P3609GABR-AA

P36 - Explosion-Proof

P3609GADR-DB

Model Numbers

Series	Operator	Port Size 1,2	Port Size 3	Flow l/min (C_V)	2/2 Normally Closed	2/2 Normally Open	3/2 Normally Closed	3/2 Normally Open	Mat'l Body	Mat'l Seal	Wt Kg (lb)
					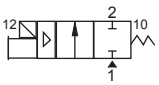	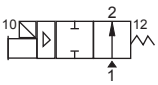	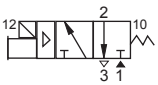	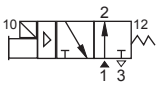			
P36	Weather-Proof	1	1 1/2	29030 (29.5)	P3607JABR-**	P3607KABR-**	P3607GABR-**	P3607HABR-**	Aluminum	NBR	4,2 (9.1)
		1 1/4	1 1/2	31290 (31.8)	P3608JABR-**	P3608KABR-**	P3608GABR-**	P3608HABR-**			
		1 1/2	1 1/2	33260 (33.8)	P3609JABR-**	P3609KABR-**	P3609GABR-**	P3609HABR-**			
	Explosion-Proof	1	1 1/2	29030 (29.5)	P3607JADR-**	P3607KADR-**	P3607GADR-**	P3607HADR-**			4,2 (9.1)
		1 1/4	1 1/2	31290 (31.8)	P3608JADR-**	P3608KADR-**	P3608GADR-**	P3608HADR-**			
		1 1/2	1 1/2	33260 (33.8)	P3609JADR-**	P3609KADR-**	P3609GADR-**	P3609HADR-**			

** = Coil Voltage Code. Coils also sold separately. Refer to "Electrical Information" at the end of this Section for additional information.

2/2 3/2

Pilot Inline Poppet Valves - Standard Solenoid

Dimensional Information

P06

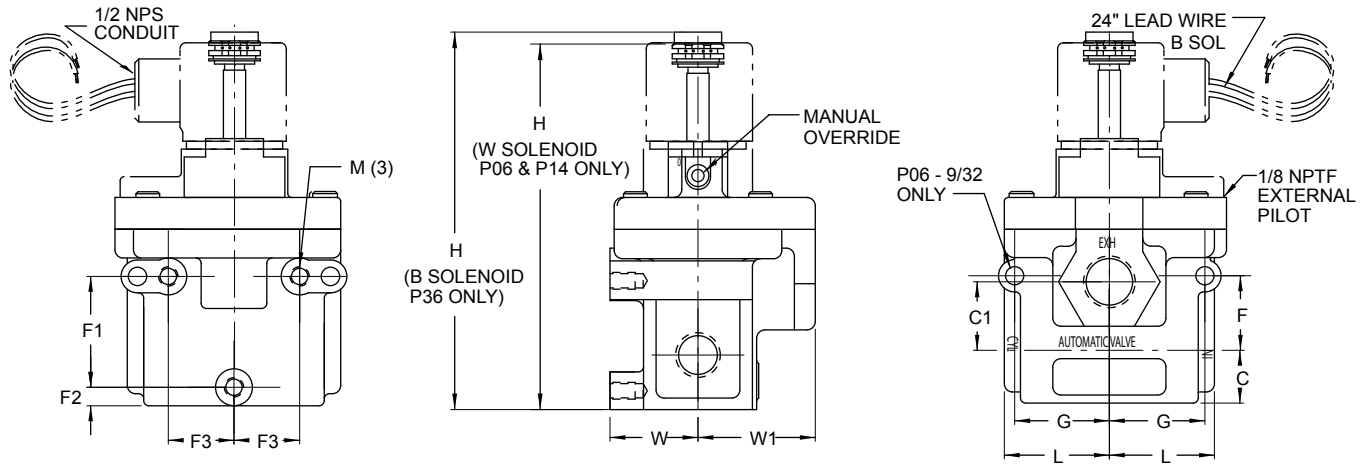

Shown: P06 Normally Open

P14

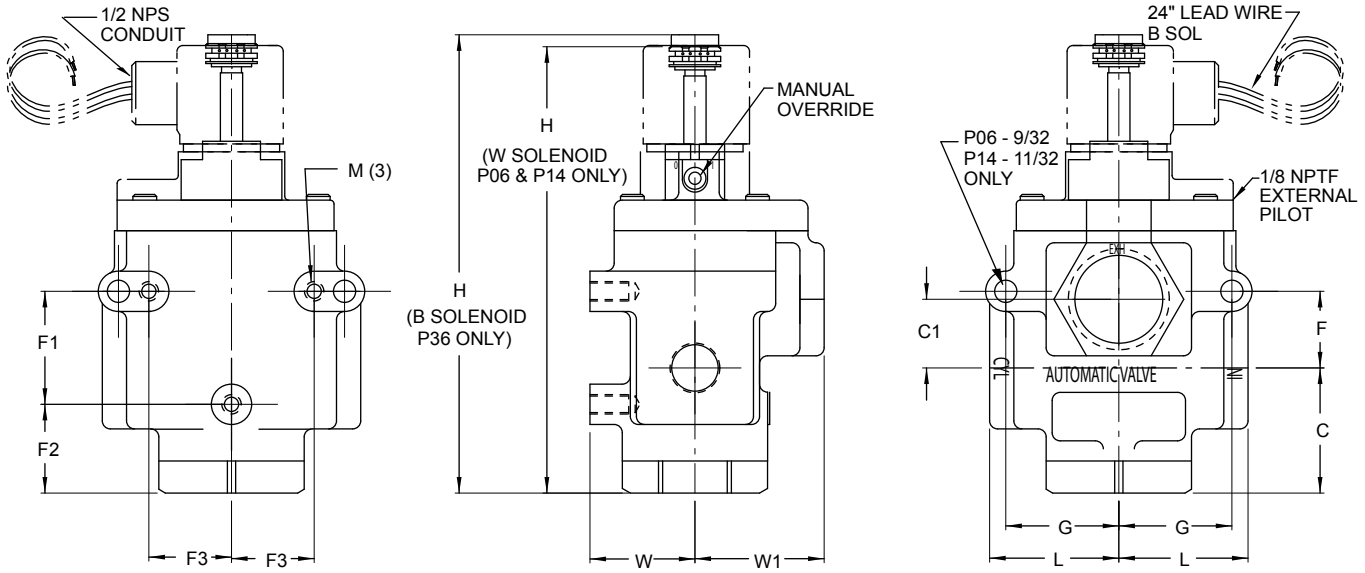

Shown: P14 Normally Closed

Series		C	C1	F	F1	F2	F3	G	H	L	M	W	W1
P06	NC	32,5 1.28	20,6 0.81	20,6 0.81	42,9 1.68	17,3 0.68	25,4 1.00	37,3 1.47	145 5.72	41,3 1.62	1/4-20	33,3 1.31	44,5 1.75
	NO	20,6 0.81	27,0 1.06	29,5 1.16	42,9 1.68	7,2 .28	25,4 1.00	37,3 1.47	140 5.51	41,3 1.62	1/4-20	33,3 1.31	44,5 1.75
P14	NC	49,3 1.94	27,0 1.06	30,2 1.19	44,5 1.75	34,9 1.37	33,3 1.31	44,5 1.75	175 6.88	50,8 2.00	5/16-18	41,3 1.62	50,8 2.00
	NO	22,1 0.87	27,0 1.06	-	44,5 1.75	7,9 0.31	33,3 1.31	-	159 6.26	50,8 2.00	5/16-18	41,3 1.62	50,8 2.00

Units of Measure: Top - mm, Bottom - inches

Pilot Inline Poppet Valves - Standard Solenoid

Dimensional Information

P36 Normally Closed (NC)

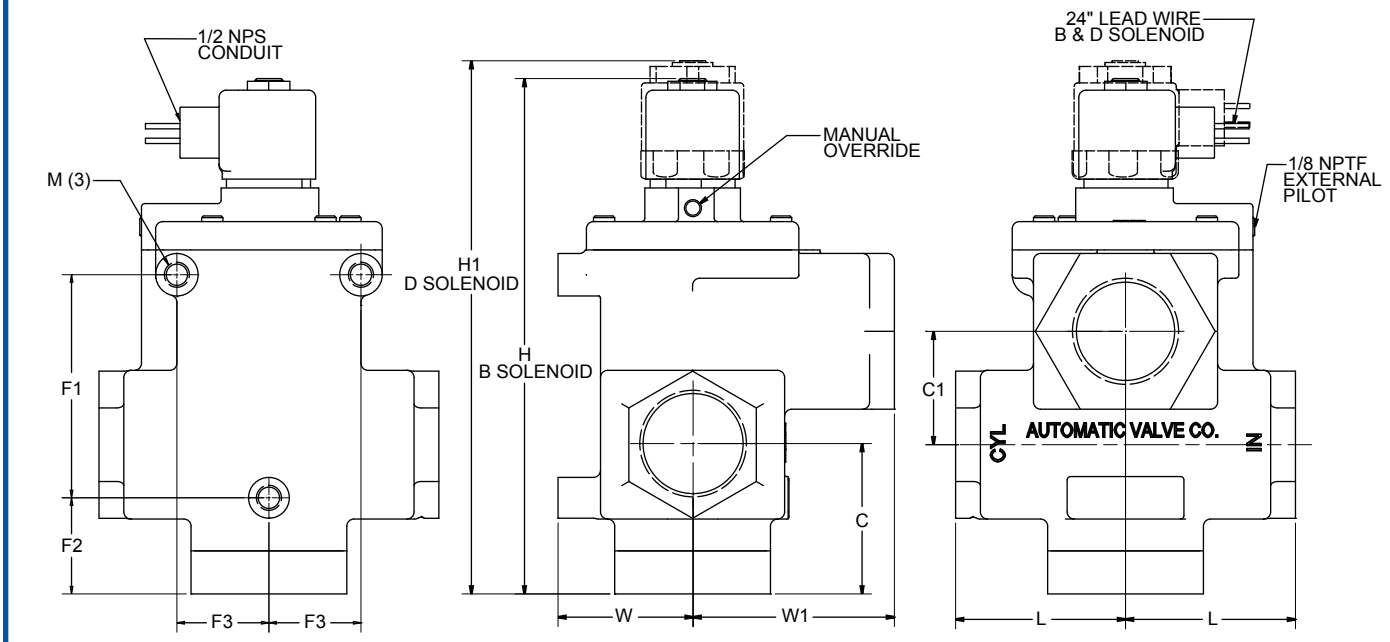

P36 Normally Open (NO)

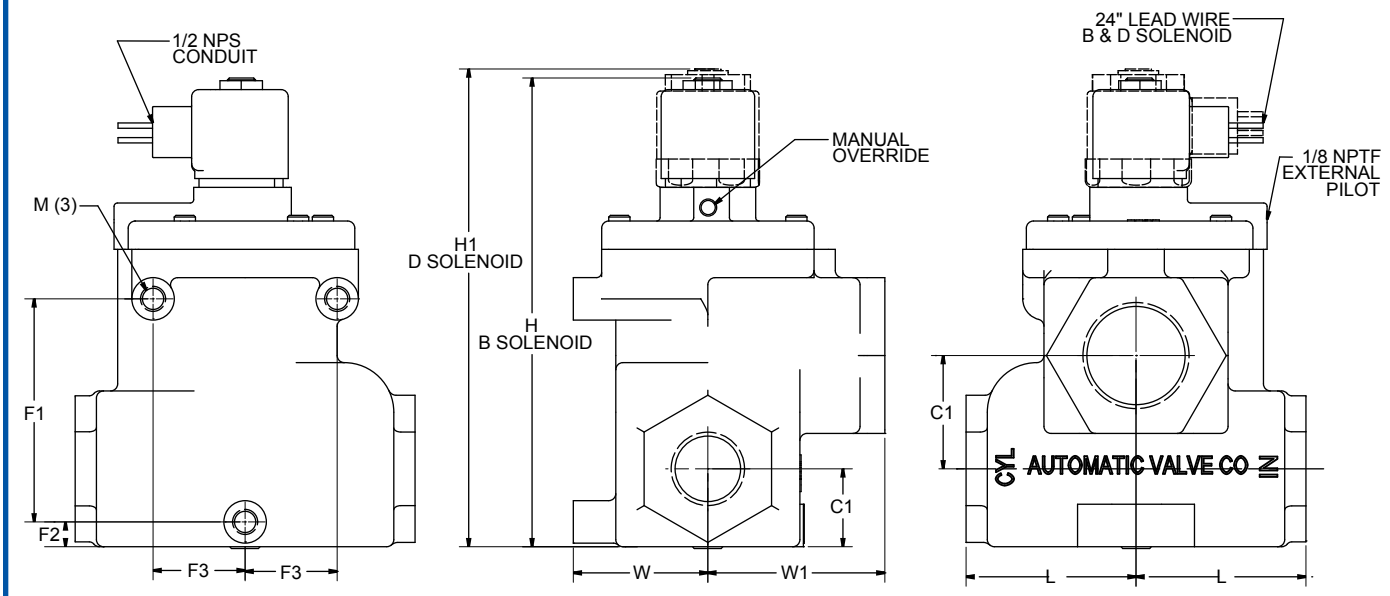

Series		C	C1	F1	F2	F3	H	H1	L	M	W	W1
P36	NC	67,5 2.66	50,8 2.00	100 3.94	43,7 1.72	41,3 1.62	229 9.00	239 9.39	76,2 3.00	3/8-16	60,5 2.38	79,2 3.12
	NO	35,1 1.38	50,8 2.00	100 3.94	11,1 0.44	41,3 1.62	210 8.25	220 8.64	76,2 3.00	3/8-16	60,5 2.38	79,2 3.12

Units of Measure: Top - mm, Bottom - inches

2/2 3/2

Pilot Inline Poppet Valves - Air Pilot

P06

P0605GAAR

P14

P1407JAAR

P36

P3609GAAR

Model Numbers

Series	Port Size 1,2	Port Size 3	Flow l/min (C_V)	2/2 Normally Closed	2/2 Normally Open	3/2 Normally Closed	3/2 Normally Open	Materials Body	Materials Seal	Wt Kg (lb)
				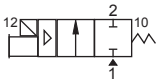	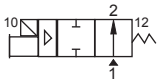	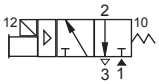	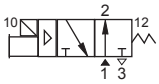			
P06	1/4	1/2	3150 (3.2)	P0603JAAR	P0603KAAR	P0603GAAR	P0603HAAR	Aluminum	NBR	0,9 (2.0)
	3/8	1/2	3840 (3.9)	P0604JAAR	P0604KAAR	P0604GAAR	P0604HAAR			
	1/2	1/2	5410 (5.5)	P0605JAAR	P0605KAAR	P0605GAAR	P0605HAAR			
P14	1/2	1	8170 (8.3)	P1405JAAR	P1405KAAR	P1405GAAR	P1405HAAR			1,4 (3.0)
	3/4	1	11120 (11.3)	P1406JAAR	P1406KAAR	P1406GAAR	P1406HAAR			
	1	1	13580 (13.8)	P1407JAAR	P1407KAAR	P1407GAAR	P1407HAAR			
P36	1	1 1/2	29030 (29.5)	P3607JAAR	P3607KAAR	P3607GAAR	P3607HAAR			3,2 (7.0)
	1 1/4	1 1/2	31290 (31.8)	P3608JAAR	P3608KAAR	P3608GAAR	P3608HAAR			
	1 1/2	1 1/2	33260 (33.8)	P3609JAAR	P3609KAAR	P3609GAAR	P3609HAAR			

Pilot Inline Poppet Valves - Air Pilot

Dimensional Information

P06

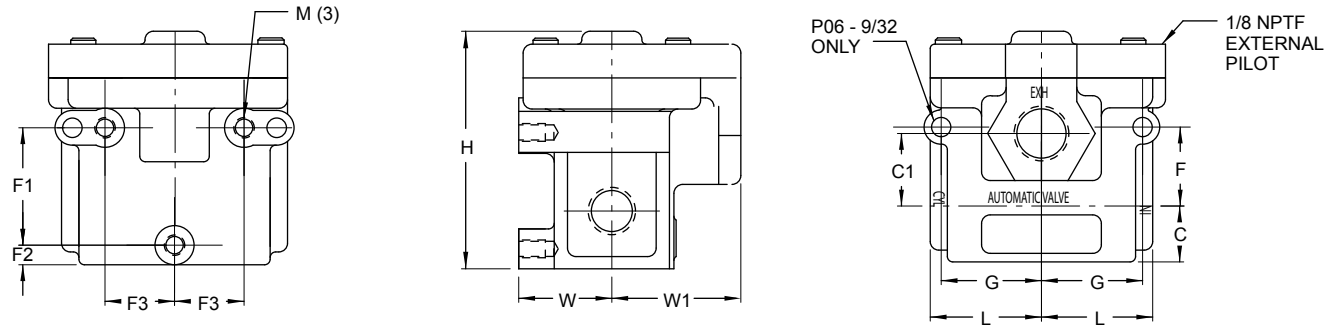

Shown: P06 Normally Open

P14

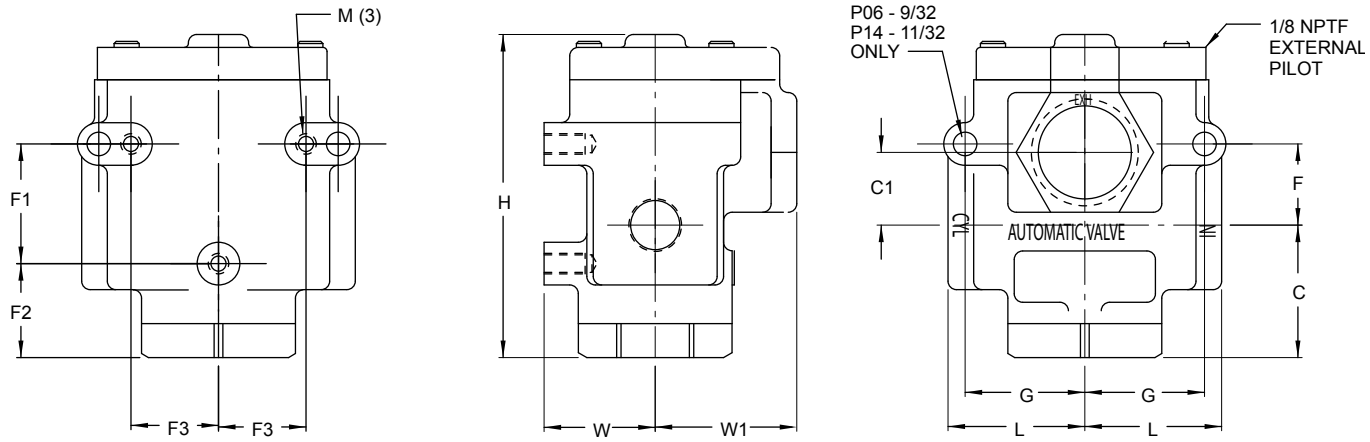

Shown: P14 Normally Closed

Series		C	C1	F	F1	F2	F3	G	H	L	M	W	W1
P06	NC	32,5 1.28	20,6 0.81	20,6 0.81	42,9 1.68	17,3 0.68	25,4 1.00	37,3 1.47	91,3 3.59	41,3 1.62	1/4-20	33,3 1.31	44,5 1.75
	NO	20,6 0.81	27,0 1.06	29,5 1.16	42,9 1.68	7,2 0.28	25,4 1.00	37,3 1.47	85,8 3.38	41,3 1.62	1/4-20	33,3 1.31	44,5 1.75
P14	NC	49,3 1.94	27,0 1.06	30,2 1.19	44,5 1.75	34,9 1.37	33,3 1.31	44,5 1.75	121 4.75	50,8 2.00	5/16-18	41,3 1.62	50,8 2.00
	NO	22,1 0.87	27,0 1.06	-	44,5 1.75	7,9 0.31	33,3 1.31	-	105 4.13	50,8 2.00	5/16-18	41,3 1.62	50,8 2.00

Units of Measure: Top - mm, Bottom - inches

2/2 3/2

Pilot Inline Poppet Valves - Air Pilot

Dimensional Information

P36 Normally Closed (NC)

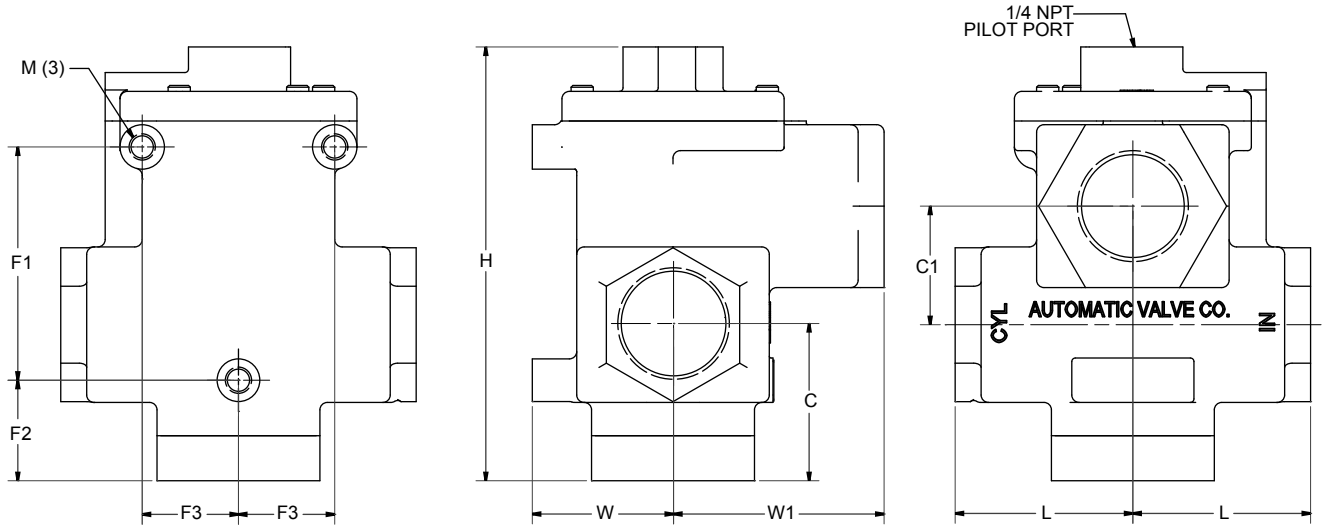

P36 Normally Open (NO)

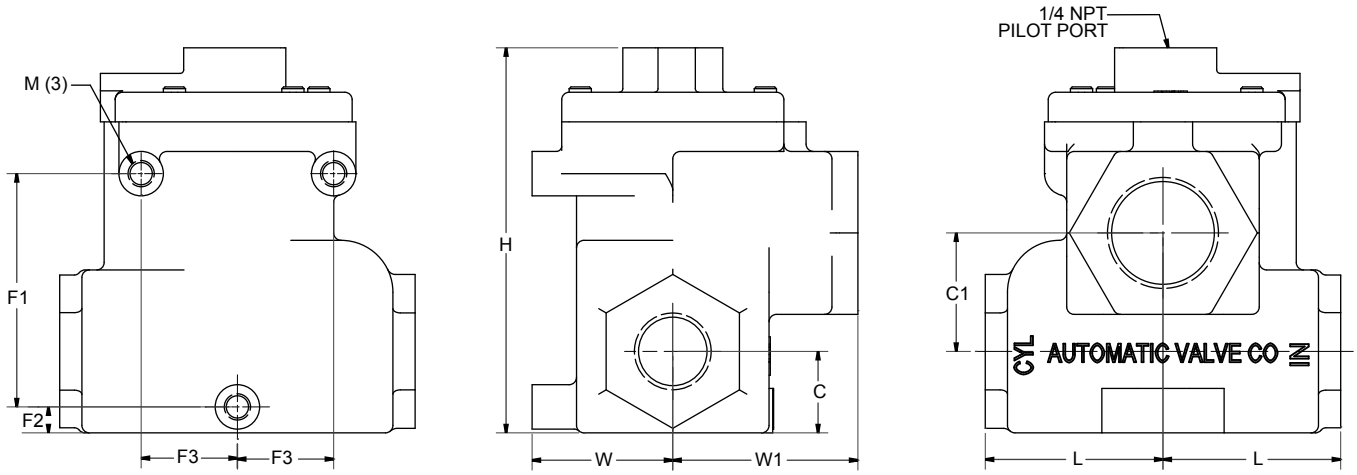

Series		C	C1	F1	F2	F3	H	L	M	W	W1
P36	NC	67,5 2.66	50,8 2.00	100 3.94	43,7 1.72	41,3 1.62	186 7.32	76,2 3.00	3/8-16	60,5 2.38	79,2 3.12
	NO	35,1 1.38	50,8 2.00	100 3.94	11,1 0.44	41,3 1.62	165 6.50	76,2 3.00	3/8-16	60,5 2.38	79,2 3.12

Units of Measure: Top - mm, Bottom - inches

Pilot Inline Poppet Valves - Options

Options (Add the suffix to the end of the model number in alpha-numeric order)

Suffix	Option	Description
A	**Fluoroelastomer Seals**	For applications where fluid media or ambient conditions are not compatible with nitrile seals. *Note: Fluorocarbon seals do not increase the effective temperature range of the valve. For high temperature applications, consult the factory.*
B	**External Pilot**	For solenoid applications where the pressure to port one is less than 2 BAR (35 PSIG). See example below for field conversion. **Field Conversion for P06 & P14 Valves (W Solenoids)** • Remove solenoid and cap from the valve body. • Remove gasket from bottom of W cap. • Rotate the gasket 180° so that the internal pilot hole in the valve body is covered by the gasket. Reposition on bottom of cap. • Refasten the W cap and solenoid to the valve body. Make sure the gasket completely covers the internal pilot hole before tightening the M3 screws. Torque to 1,02 N-m (9 in-lbs) ±10%. • Remove the 1/8 NPTF pipe plug from the cap and make the external pilot connection. 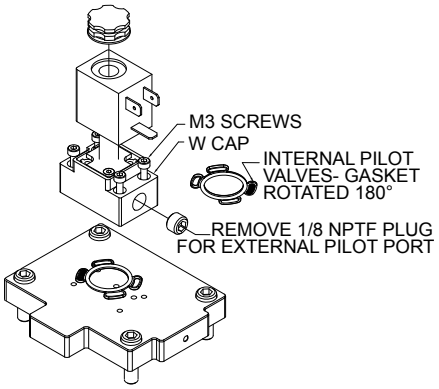 **Field Conversion for P36 Valves (B & D Solenoids)** • Remove solenoid and cap from the valve body. • Remove the pipe plug that is stored in the top surface of the body and place it in the tapped hole in the bottom surface cap. • Refasten cap and solenoid to the valve body. Torque to 6,2 N-m (55 in-lbs) ±10%. • Remove the 1/8 NPTF pipe plug from the cap and make the external pilot connection. 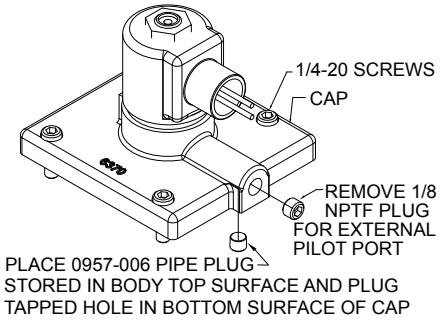
C	**Conduit Coil**	Refer to the "Electrical Information" page in this section for details.
CT	**Conduit Coil High Temperature**	Refer to the "Electrical Information" page in this section for details.
G	**Coil With 18" Leads**	Refer to the "Electrical Information" page in this section for details.
J	**Vacuum Spring**	Provides additional reset force when pressure at Port 1 is less then 0 PSIG (0kPa). For solenoid pilot valves, also specify option "B".
L	**Low Watt Coil**	Power Consumption = 2.5 Watts. Standard as Push Non-Locking Override. Also available with Option 2, Extended Turn-Locking Override.
LL	**Lowest Watt Coil**	Power Consumption = 0.7 Watts. Standard as Extended Turn-Locking Override.
T	**High Tempurature Coil**	Refer to the "Electrical Information" page in this section for details. (P36 Only)
Y	**Explosion-Proof Coil (CSA, FM)**	Refer to the "Electrical Information" page in this section for details.
Z	**Explosion-Proof Coil (Atex, PTB)**	Refer to the "Electrical Information" page in this section for details.
1	**Push Turn-Locking Override**	Solenoid cap provides an override that is pushed in and turned to actuate & lock in the "on" position.
2	**Extended Turn-Locking Override**	Solenoid cap provides an extended override that is turned to lock in the "on" position.

2/2 3/2

Direct Inline Poppet Valves - Configuration Example

Valve With W-Solenoid Cap	+	Coil	=	Valve With Coil
	+	NEMA 4x with DIN 43650 Connection	=	
P0603JAWR		**7019-9****		**P0603JAWR-****
	+	NEMA 4x with 18″ Leads	=	
P0603JAWR		**7019-9**G**		**P0603JAWR-**G**
	+	NEMA 4x 1/2″ Conduit with 30″ Leads	=	
P0603JAWR		**7019-9**C**		**P0603JAWR-**C**
	+	Explosion-Proof 1/2″ Conduit with 24″ Leads	=	
P0603JAWR		**7019-9**Y**		**P0603JAWR-**Y**
	+	ATEX Explosion-Proof with 39″ Cable	=	
P0603JAWR		**7152-9****		**P0603JAWR-**Z**

2/2 3/2

Pilot Inline Poppet Valves - Electrical Information

Part Numbers

Description		Series	Operator Type	Instructions	Wt. Kg (lb)	Coil Part Number **=Voltage
Weather-Proof DIN 43650 Industrial Form B Connection NEMA 4X		P06 P14	**W**	Order coil separately (specify voltage code from below)	0,05 (0.12)	**7019-9****
Weather-Proof 18" Leads NEMA 4X	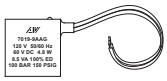	P06 P14	**W**	Order coil separately (specify voltage code from below)	0,05 (0.12)	**7019-9**G**
Weather-Proof 1/2" Conduit with 30" Leads NEMA 4X	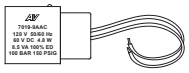	P06 P14	**W**	Order coil separately (specify voltage code from below)	0,05 (0.12)	**7019-9**C** **7019-9**CT** (high temp 82°C max)
Explosion-Proof 1/2" Conduit with 24" Leads CSA & FM Approved CL. I; Zone1 Ex m II T4; AEx m II CL. I; Div.1; GR. A, B, C, D CL. II; GR. E, F, G CL. III T4 Ta=-20°C to +60°C NEMA 4, 4X, 7C, 7D, 9	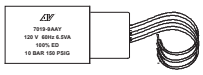	P06 P14	**W**	Order coil separately (specify voltage code from below)	0,20 (0.44)	**7019-9**Y**
Explosion-Proof 3m Cable & Strain Relief Ex m II T5 PTB 03 ATEX 2018 X Ex II 2 G EEx m II T5 Ex II 2 D IP65 T95°C	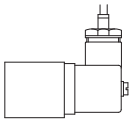	P06 P14	**Z**	Order coil separately (specify voltage code from below)	0,36 (0.78)	**7152-9****
Weather-Proof 1/2" Conduit with 24" Leads NEMA 4x	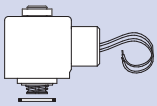	P36	**B**	Coil included (specify voltage code from below)	0,27 (0.61)	**A5983-**F**
Explosioin-Proof 1/2" Conduit with 24" Leads CL. I; Div.2; GR. A & B. CL. I; Div.1; GR. C & D CL. II; Div.1; GR. E, F, G	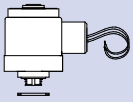	P36	**D**	Coil included (specify voltage code from below)	0,48 (1.05)	**A6454-**F**

Voltage Codes (Lower wattage options available, consult factory)

K02			Current (Amps) Inrush			Current (Amps) Holding			Resistance (OHMS @ 25°C)			Power (AC=VA, DC=Watts)		
	Operator Type:		W	Z		W	Z		W	Z		W	Z	
**	Volt. +/-10%		NEMA		Atex	NEMA		Atex	NEMA		Atex	NEMA		Atex
Code	4	7,9&Z	4	7,9		4	7,9		4	7,9		4	7,9	
DA	24/50 24/60	-	.36	-	-	.24	-	-	32	-	-	6.9	-	-
AA	120/50 120/60	120/60	.08	.10	-	.05	.05	-	840	530	-	6.9	6.5	-
AB	230/50 230/60	240/60	.04	.05	-	.03	.03	-	3310	2345	-	6.4	6.8	-
DA	12VDC	12VDC	.38	.38	-	.38	.38	-	32	32	-	4.8	4.5	-
DB	24VDC	24VDC	.20	.19	.05	.20	.19	.05	121	128	275	4.8	4.5	1.6
AB	125VDC	-	.04	-	-	.04	-	-	3310	-	-	5.9	-	-

P36			Current (Amps) Inrush		Current (Amps) Holding		Resist. (OHMS @ 25°C)		Power (Watts)	
	Operator Type:		B	D	B	D	B	D	B	D
**	Volt. ±10%		NEMA							
Code	4	7, 9	4	7, 9	4	7, 9	4	7, 9	4	7, 9
AA	100/50 120/60	120/60	.26	.26	.16	.16	156	156	8.7	7.3
AB	208/50 240/60	240/60	.13	.13	.08	.08	636	636	8.7	7.3
DA	12VDC	12VDC	.80	.80	.80	.80	15.1	15.1	9.5	9.5
DB	24VDC	24VDC	.39	.39	.39	.39	62	62	9.5	9.5

Connectors (Not polarity dependent)

DIN 43650 Industrial Form B						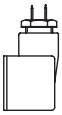	
	Maximum Cable Diameter: 9mm (0.35")						
Type	Strain Relief without Cord	Strain Relief with Light		1/2" Conduit without Cord	Molded with 6' Cord	Strain Relief with Light & 6' Cord	
		100-240 AC 48-120 DC	6-48 AC/DC			100-240 AC 48-120 DC	6-48 AC/DC
Part Number	**7020-001**	**7020-AA**	**7020-DB**	**7039-001**	**7020-006**	**7094-006**	**7094-007**

2/2 3/2

Pilot Inline Poppet Valves - Service Information

Valve must be disconnected from all air and electrical power sources before disassembly.

Service Kit Installation Instructions

1. Follow appropriate lock-out/tag-out procedures. Do not attempt to service a valve, if you are not familiar with lock-out/ tag-out procedures.
2. Turn off electrical power to the valve.
3. Remove valve from all electrical and air power sources.
4. Ensure all stored air power is exhausted.
5. Remove operator cap by removing 4 socket head cap screws from the operator cap.
6. Remove internal screws concurrently, then remove existing serviceable components by "pushing" internal components gently out of the valve body.
7. Lubricate the designated "+" items in the assembly drawing at the right with a thin film of lubricant - the item should look "WET" with no excess lubricant visible.
8. Replace components as shown.
   - Use retention compound on each screw when reinstalling.
9. Orientate the operator cap by aligning pilot hole in body with pilot hole in cap.
10. Torque cap screws into body to 6,7 N-m (59 in-lbs) ±10%. Alternate tightening of screws, so cap "squeezes" evenly onto the body.

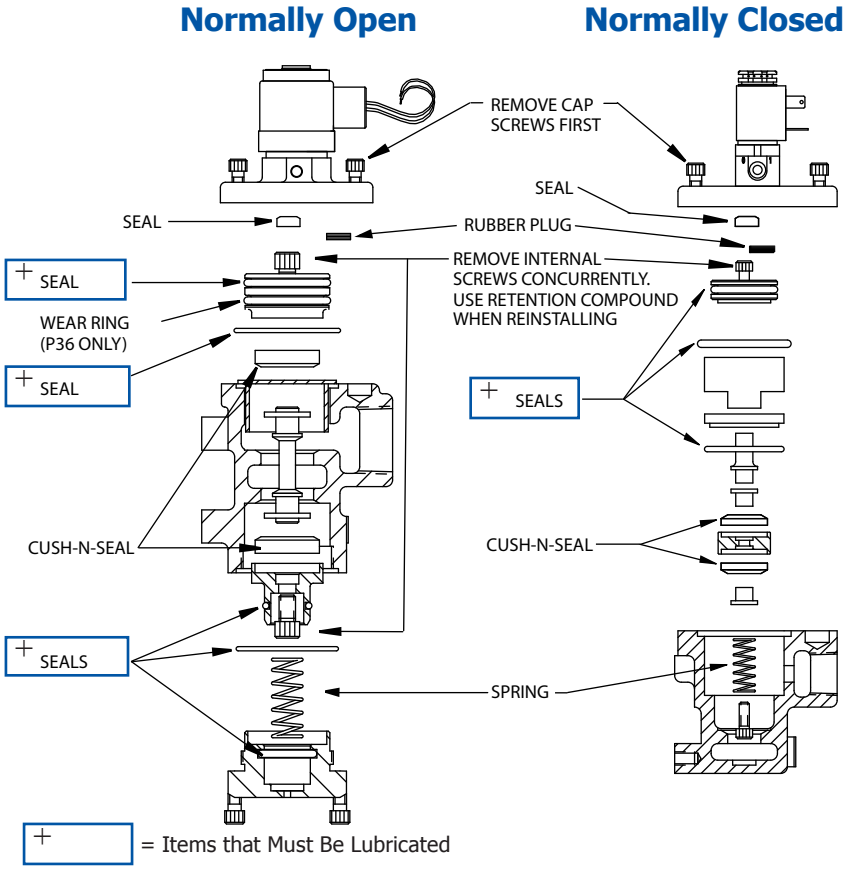

Air Line Lubrication of Automatic Valve products is not required, but is recommended to maximize service life. Oils should be compatible with seal material, have an ISO 32 or lighter viscosity, and have an aniline point between 82°C (180°F) and 99°C (210°F).
Refer to the Maintenance Section of this catalog for recommended lubricants.

Model Numbers: Service Kits

Series	Description	Body Style			
		Normally Closed (NC)		Normally Open (NO)	
		Model Number	Contents	Model Number	Contents
P06	2 Way	K-P0600J	Rubber Plug (1), Seals (5), Cush-N-Seal (1), Spring (1)	K-P0600K	Rubber Plug (1), Seals (4), Cush-N-Seals (2), Spring (1)
	3 Way	K-P0600G	Rubber Plug (1), Seals (4), Cush-N-Seals (2), Spring (1)	K-P0600H	
P14	2 Way	K-P1400J	Rubber Plug (1), Seals (6), Cush-N-Seal (1), Spring (1)	K-P1400K	Rubber Plug (1), Seals (5), Poppet (1), Spring (1)
	3 Way	K-P1400G	Rubber Plug (1), Seals (4), Cush-N-Seals (2), Spring (1)	K-P1400H	Rubber Plug (1), Seals (4), Poppet (1), Spring (1)
P36	2 Way	K-P3600J	Wear Ring (1), Seals (5), Cush-N-Seals (2), Spring (1)	K-P3600K	Seals (5), Cush-N-Seals (2), Spring (1)
	3 Way	K-P3600G		K-P3600H	